2543N9C2B | 碳刷 Graphite Brush

应用领域：医疗、保健、汽车、机器人、工业自动化等精密驱动领域。
Applications: precision drives in medical equipment and devices, healthcare products, automotive, robotics, and industrial automation.

主要技术指标 | Characteristics

				03-65-24.0	06-110-24.0	05-65-48.0
1	电压	Voltage	V	24.0	24.0	48.0
2	转子电阻	Rotor Resistance	Ω	6.3	2.7	23.0
3	空载转速	No-load speed	rpm	6500	11000	6500
4	空载电流	No-load current	mA	25	45	20
5	堵转转矩	Stall torque	mNm	132.6	183.4	144.6
6	堵转电流	Stall current	mA	3810	8890	2090
7	额定转矩	Nominal torque	mNm	37.6	20.2	42.6
8	额定转速	Nominal speed	rpm	4660	9790	4580
9	额定电流	Nominal current	mA	1100	1020	630
10	最大输出功率	Max. output power	W	22.6	52.9	24.6
11	最大效率	Max. efficiency	%	85	86	81
12	反电势常数	Back-EMF constant	mV/rpm	3.7	2.2	7.3
13	转矩常数	Torque constant	mNm/A	35.0	20.7	69.8
14	转速 / 转矩斜率	Speed/torque gradient	rpm/mNm	49.0	60.0	45.0
15	转子惯量	Rotor inertia	gcm^2	13.2	13.2	13.2
16	重量	Weight	g	98	98	98
17	热阻 (机壳 - 环境)	Thermal resistance housing-ambient	K/W		11.04	
18	热阻 (线圈 - 机壳)	Thermal resistance winding-housing	K/W		4.67	
19	热时常数 (电机)	Thermal time constant motor	s		266	
20	热时常数 (线圈)	Thermal time constant winding	s		123	
21	工作温度范围	Operating temperature range	°C		-20~+120	
22	绕组耐温等级	Thermal class of winding	°C		155	
23	轴向间隙	Axial play	mm		0.025	
24	径向间隙	Radial play	mm		0.02~0.15	
25	动态轴向载荷	Axial load dynamic	N		20	
26	静态轴向载荷	Axial load static	N		60	
27	径向载荷（距安装面 3mm）	Radial load at 3 mm from mounting face	N		40	
28	极对数	No. of pole pairs			1	
29	轴承	Bearings			2 枚滚动轴承/2 ball bearings	
30	换向结构	Commutator			贵金属 9 相/metal 9 segments	
31	防护等级	Protection class			IP 20	

★可选参数 Options: 导线长度 Lead wires length 轴长 Shaft length 性能 Special coils
齿轮箱 Gearheads 编码器 Encoder

外观图 | Outline Drawing

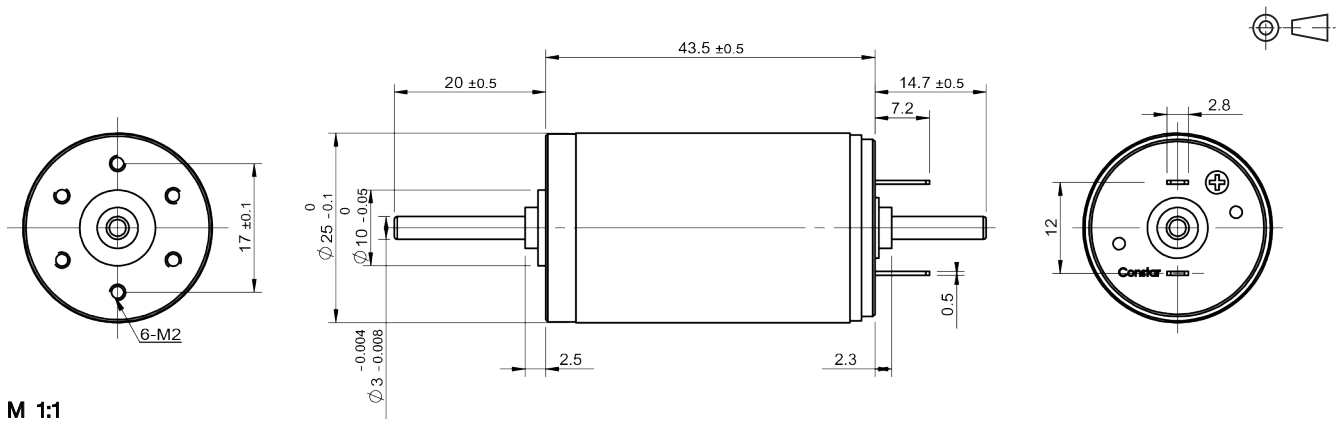

M 1:1

© 2022 CONSTAR
www.constarmotor.com